Compressed Block

CEB_90, CEB_140, CEB_190



Description
Compressed Stabilised Earth Block made from unpolluted, undisturbed soil.

Circularity
±80% secondary resources
100% Closed Loop Recycling
100% Reusable

Manufacturer
Claesen + BC materials,
in Lummen, Belgium

Product

Composition

— Loess loam from excavated urban sites (mineral waste stream)
— Crushed washed concrete (mineral waste stream)
— Rhine sand
— 3,85 % cement CEM III 42,5



Loess loam



Crushed washed concrete



Rhine sand



Cement

Designation BTCS – CL1 – RC 7 – Mv 2,0 – 13 × 9/14/19 × 29 – S 3,85 % CEM III 42,5 – XP P 13-901

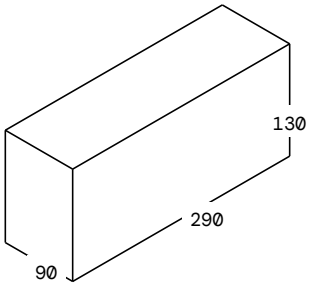

ⓐ CEB_90

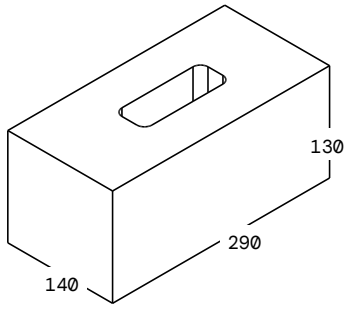

ⓑ CEB_140

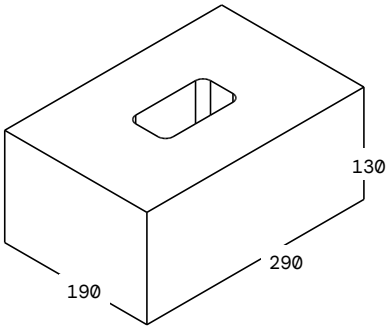

ⓒ CEB_190

Physical properties of blocks

Gross/Net Density block ⓐ CEB_90	2010/2010 kg/m³	EN772-13
Gross/Net Density block ⓑ CEB_140	1760/2010 kg/m³	EN772-13
Gross/Net Density block ⓒ CEB_190	1760/2010 kg/m³	EN772-13
Compressive strength (f_{mean})	10 N/mm²	EN772-01
Tolerance Class	D2	EN771-03
Plan parallelism of the bed faces	2,0 mm	EN772-16
Flatness of Faces	0,3 mm	EN772-20
Equilibrium Moisture Content	2%	EN772-10
Initial Water Absorption	IW 2	EN772-11
Hygrometric Expansion	0,26 mm/m	EN772-14
Compressive strength category	Rc 7	XPP13-901
Static E-modulus	3000 N/mm²	DIN 18945
Application Class	CL1 (Outside masonry exposed to elements)	XPP13-901
Water vapor diffusion number μ	5/10	XPP13-901
Thermal conductivity λ	1 W/m²K	XPP13-901
Fire Reaction	A1 (Non-flammable)	XPP13-901
Abrasion Category	ab 1 (best)	XPP13-901
Water Adsorption (0,5/1/3/6/24/48h)	6/10/11/29/63/93 g/m²	DIN 18945
Moisture Buffer Value	2,2 - 3	
VOC-emissions	VOC-free	EN 16516

Physical properties of masonry	Léém Mortar (10mm)	Léém Adhesive Mortar (2-3mm)	Bastard mortar with Léém Additive (10mm)	
Compressive Strength ($f_{k,95\%}$)	4,6 N/mm²	5,9 N/mm²	6,2 N/mm²	EN1052-1
Static E-modulus (mean)	3600 N/mm²	4500 N/mm²	7900 N/mm²	EN1052-1
Flexural Strength ($f_{xk1,2}$)	⊥ 0,20 N/mm² ∥ 0,03 N/mm²	⊥ 0,30 N/mm² ∥ 0,15 N/mm²	⊥ 0,31 N/mm² ∥ 0,14 N/mm²	EN1052-2
Initial Shear Strength (F_{v0k})	0,02 N/mm²	0,12 N/mm²	0,22 N/mm²	EN1052-3
Bond Wrench Strength (F_{wk})	0,02 N/mm²	0,10 N/mm²	0,08 N/mm²	EN1052-5
Airborne Sound Insulation (14cm th. without plaster)		54,3(-1,6;-4,9)dB		EN ISO 717-1
Fire Resistance (14cm th. without plaster)		(R)EI 180		NBN EN 1363-1
Specific Heat Capacity	1000 J/kgK	1000 J/kgK	1000 J/kgK	
Thermal Effusivity	15,79 m²/s	15,79 m²/s	15,79 m²/s	
Thermal Diffusivity	0,25 $Wh^{0,5}/(m^2K)$	0,25 $Wh^{0,5}/(m^2K)$	0,25 $Wh^{0,5}/(m^2K)$	
°T Amplitude Attenuation		TBC Q2 2025		
Phase Shifting		TBC Q2 2025		
Global Warming Pot. (GWP)(C2C)		0,0631 kg CO_2eq/kg	0,1246 kg CO_2eq/kg	EN15804:A2
Environmental Impact (PEF)(C2C)		0,0053 mpt/kg	0,0082 mpt/kg	EN15804:A2

Shelf life

Can be kept indefinitely when dry.

Packaging

Plastic wrapped pallet 120x120 cm with deposit.
CEB_90 192 pc/pallet with 1276 kg/pallet.
CEB_140 128 pc/pallet with 1190 kg/pallet.
CEB_190 96 pc/pallet with 1210 kg/pallet.

Usage

CEB_90 in a halfblock wall
1 pallet = 8,06 m² with 10mm joints or 7,48 m² with 3mm joints
1 m2 = 23,81 pc with 10mm joints or 25,66 pc with 3mm joints

CEB_140 in a halfblock wall
1 pallet = 5,38 m2 with 10mm joints or 4,99 m² with 3mm joints
1 m² = 23,81 pc with 10mm joints or 25,66 pc with 3mm joints

CEB_190 in a halfblock wall
1 pallet = 4,03 m² with 10mm joints or 3,74 m² with 3mm joints
1 m² = 23,81 pc with 10mm joints or 25,66 pc with 3mm joints

Field of application

For masonry protected from the elements. Suitable for damp rooms, do not apply in areas of direct contact with water. See our Earth Block Guide for conception and execution guidelines.
Suitable for load-bearing walls if Eurocode 6 is followed.

Characteristics

Circular material in origin: Valorization of a "waste" stream
Circular material in destination: infinitely reusable
CO2 neutral: no combustion required to produce the building material
Made of undisturbed, unpolluted soil
Moisture and heat regulating
Vapor-open
Anti-static
Reduces acoustic transmission and reverberation
Colorstable

Execution

Storage	Store in a dry place, lifted from the ground, on a flat surface, move without jarring.
Conditions	Upon execution, the temperature of the air and substrate should be minimum 5°C.
Application	The rules of craftsmanship are carefully followed when mortaring the earth blocks. Please check Earth Block Guide by Léém for conception and execution guidelines. Mix minimum 6 pallets when masoning, prewet blocks before laying, use a rubber hammer to put in place, protect fresh masonry walls from rain.
Drying time	Under normal conditions (20°C and 60% relative humidity), the masonry wall will dry in 14 days.
Tools	Rubber hammer, Léém Adhesive Mortar Spreader Box/Trowel, standard masonry tools.
Disposal	Before disposing of Léém Compressed Blocks, remember to recover and reuse them, as they can be dismantled easily. There is a take-back program available, contact us for more information. When used correctly, Léém Compressed Blocks are harmless to humans and the environment. Waste can be disposed of as non-hazardous inert waste.

Legislation

Conformity	Complies with Brussels Soil Ordinance and Decree March 29, 2018. Complies with Flemish Soil Decree and its implementation rules (VLAREMA and VLAREBO). Tested on 40+ parameters of pollution: Non-polluted resources: No PCB, asbestos, PFC, lead, flame retardants, phthalates, isocyanates, PFAS, ...

Disclaimer

The information in this product description has been compiled with the greatest care. Compensation claims, unless they result from factory mixing errors, are excluded. With each new edition of the product information, the validity of the previous edition expires.